CO2037 – Electrical Electronic Circuits

Basic Electronic Circuit Components

Image Source: Internet

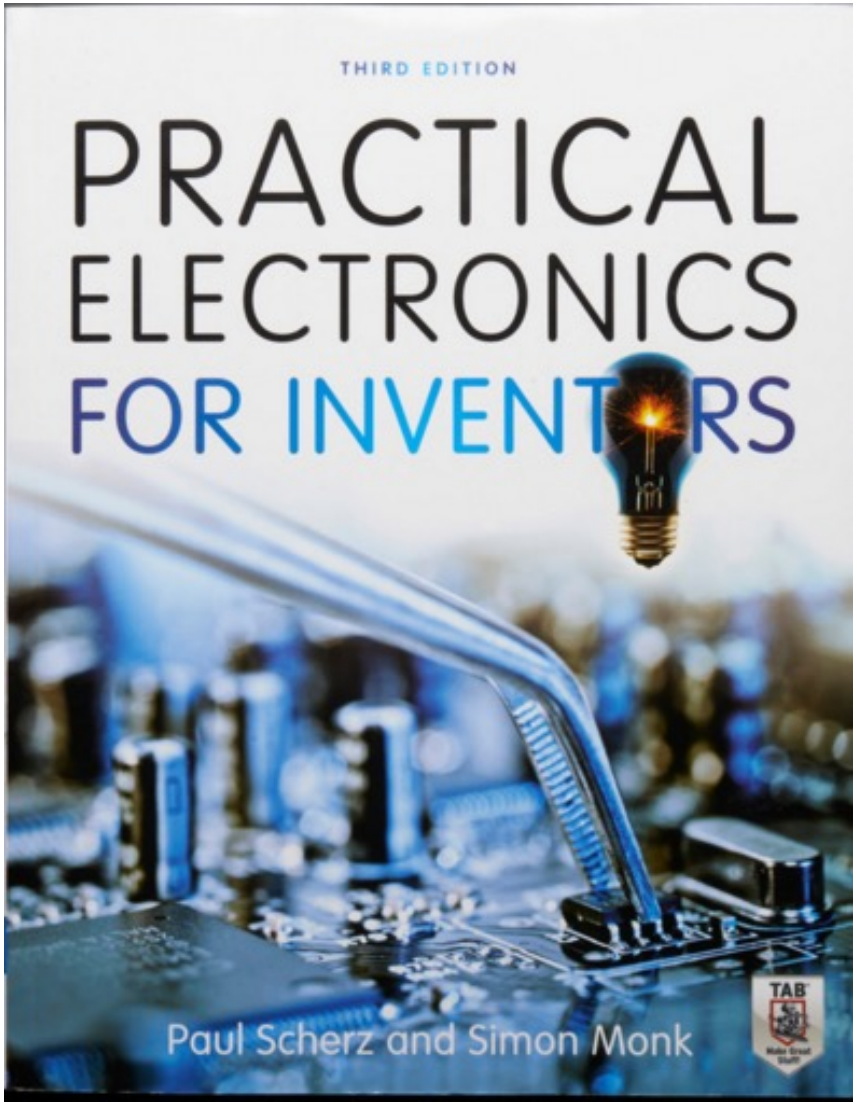
THIRD EDITION
PRACTICAL
ELECTRONICS
FOR INVENTORS
Paul Scherz and Simon Monk
TAB

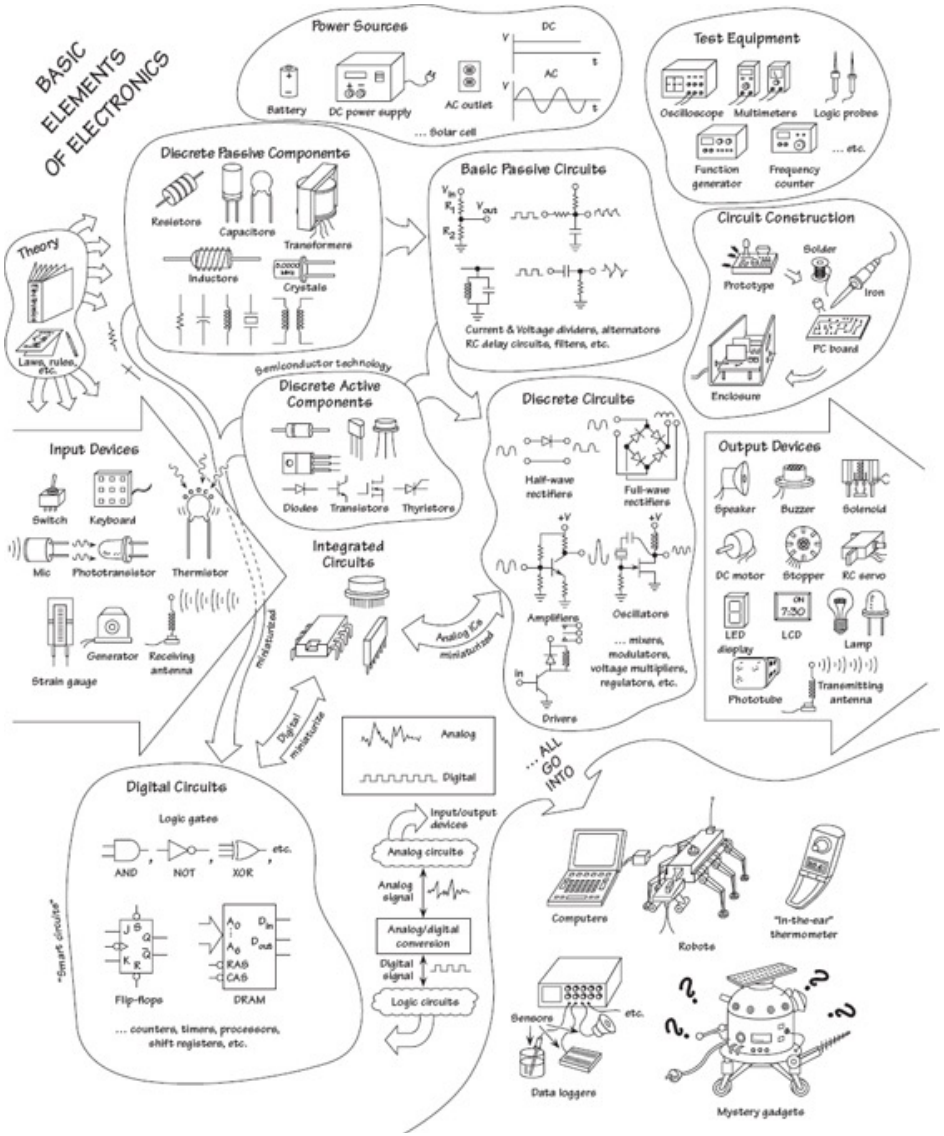
BASIC ELEMENTS OF ELECTRONICS
Power Sources
Battery
DC power supply
AC outlet
... Solar cell
DC
AC
Test Equipment
Oscilloscope
Multimeters
Logic probes
Function generator
Frequency counter
... etc.
Discrete Passive Components
Resistors
Capacitors
Transformers
Inductors
Crystals
Basic Passive Circuits
Current & voltage dividers, alternators
RC delay circuits, filters, etc.
Circuit Construction
Prototype
Solder
Iron
PC board
Enclosure
Theory
Laws, rules, etc.
Semiconductor technology
Discrete Active Components
Diodes
Transistors
Thyristors
Discrete Circuits
Half-wave rectifiers
Full-wave rectifiers
Amplifiers
Oscillators
... mixers, modulators, voltage multipliers, regulators, etc.
Drivers
Input Devices
Switch
Keyboard
Mic
Phototransistor
Thermistor
Generator
Receiving antenna
Strain gauge
Output Devices
Speaker
Buzzer
Solenoid
DC motor
Stepper
RC servo
LED display
LCD
Lamp
Phototube
Transmitting antenna
Integrated Circuits
miniaturized
Analog IC miniaturized
Digital miniaturized
Analog
Digital
... ALL GO INTO
Digital Circuits
Logic gates
AND
NOT
XOR
etc.
Flip-flops
DRAM
... counters, timers, processors, shift registers, etc.
"Smart circuits"
Input/output devices
Analog circuits
Analog signal
Analog/digital conversion
Digital signal
Logic circuits
Computers
Robots
"In-the-ear" thermometer
Sensors
etc.
Data loggers
Mystery gadgets

Basic Electronic Circuit Components

- Wires, Cables, and Connectors
- Batteries
- Switches
- Resistors
- LED (Light Emitted Diode)
- Exercises
- ***Pull up and Pull down resistors***

Solid Core Wires

- Strong
- High current

Solid Core Applications

Stranded Wires (Multicore Wires)

- Soft
- Smaller current
- Easy to Draw

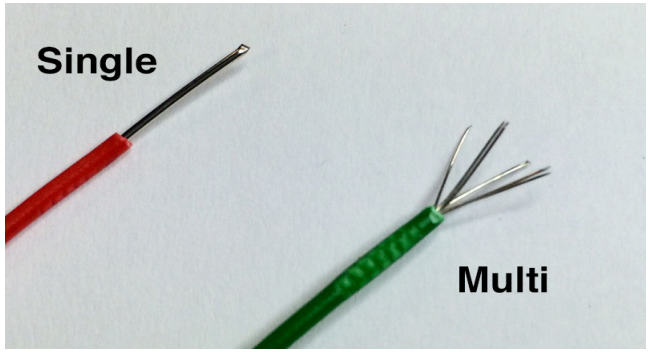

Braided Wires

- Soft and High current

Coaxial Cables

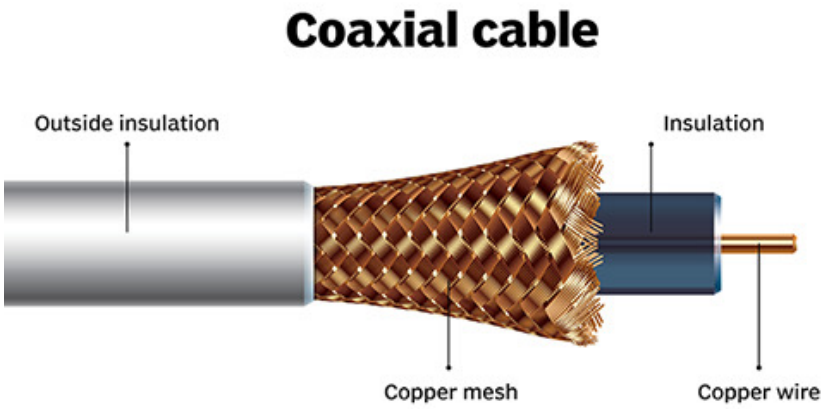

- High speed communication systems

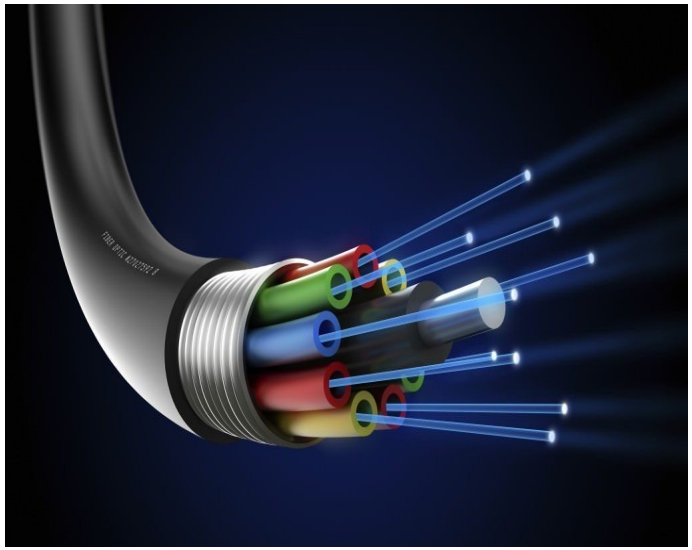

Twisted Pair Cables

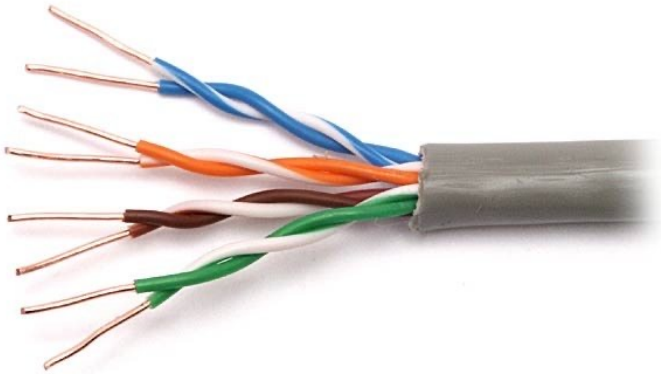

- Pulse noise avoidance
- ADSL Modem (RJ45)

Battery

- The most popular storage device

Rechargeable Batteries

Super Capacitors

Rechargeable Batteries vs. Super Capacitor

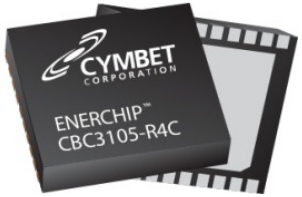

[Cymbet]

500 recharge cycles

Difficult to estimate the state of charge

Low leakage current

[CapXX]

500 000 recharge cycles

Easy to estimate the state of charge

High leakage current

New Generation of Batteries

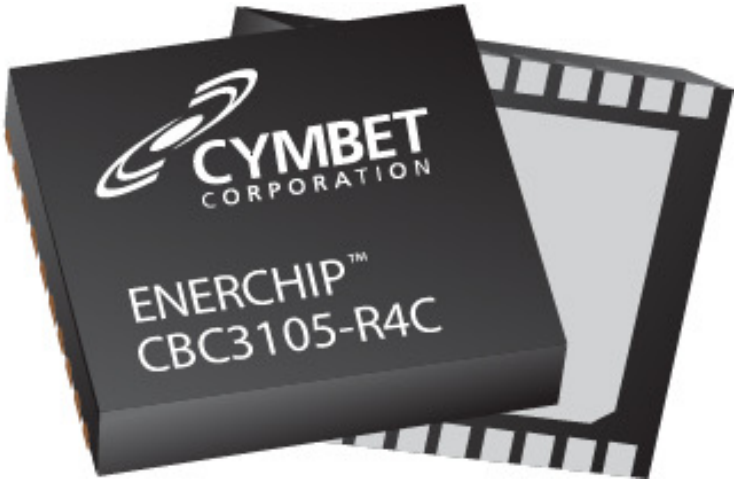

- IC Rechargeable Batteries
- Hybrid Batteries (Batteries + Capacitors)

Switch

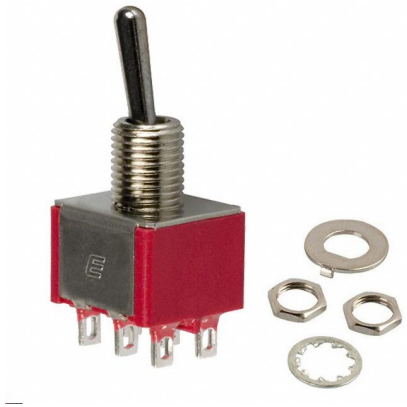

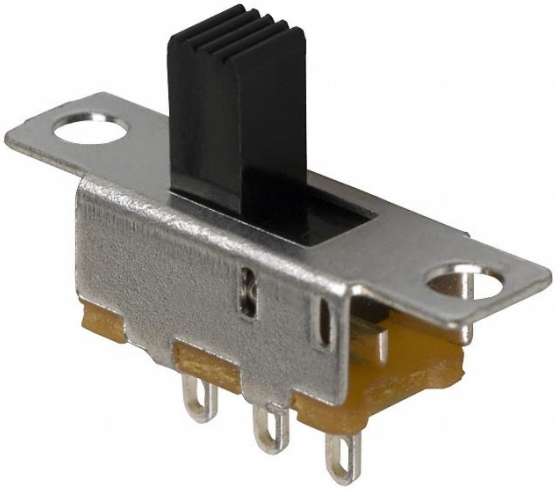

- A switch is a mechanical device that interrupts or diverts electric current flow within a circuit

Switch Applications (1)

- Here's a simple home security alarm that's triggered into action (buzzer and light go on) when one of the normally open switches is closed. Magnetic reed switches work particularly well in such applications.

Simple Security Alarm

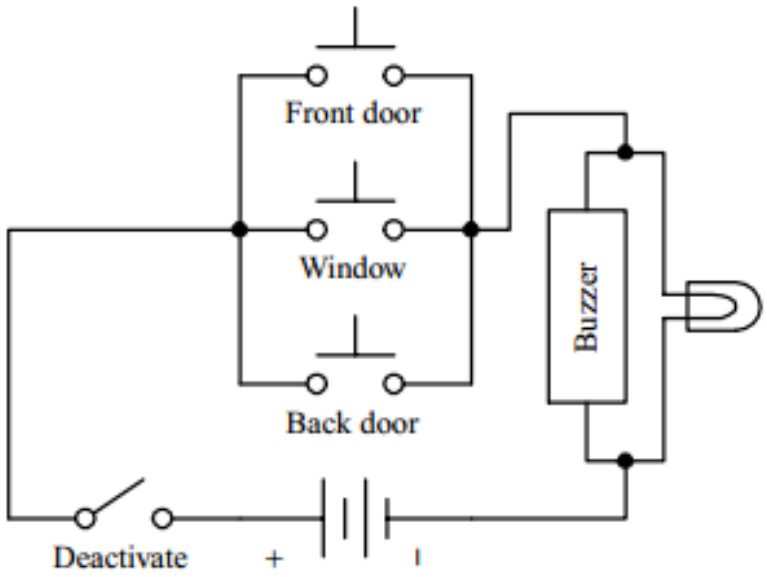

Switch Applications (2)

- Here's a switch network that allows an individual to turn a light on or off from either of two locations. This setup is frequently used in household wiring applications.

Dual-Location On/Off Switching Network

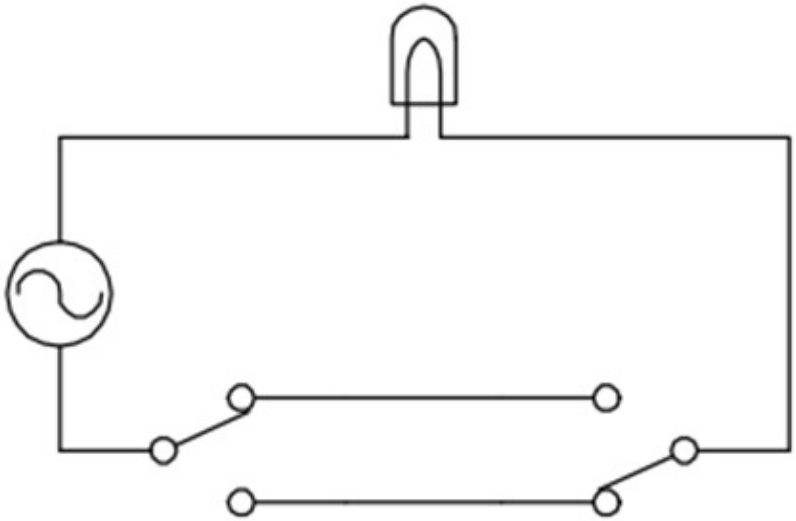

Switch Application (3)

- A DPDT switch, shown here, can be used to reverse the direction of current flow. When the switch is thrown up, current will flow throw the left light-emitting diode (LED). When the switch is thrown down, current will flow throw the right LED. (LEDs only allow current to flow in one direction.)

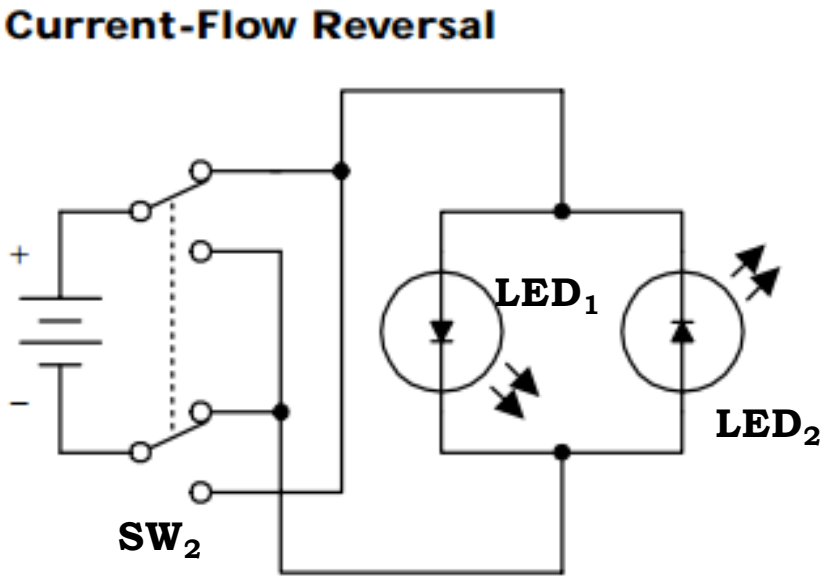

Resistors

- Resistors are electrical devices that act to reduce current flow and at the same time act to lower voltage levels within circuits.

  The relationship between the voltage applied across a resistor and the current through it is given by $V = IR$.

- Resistors may have fixed resistances, or they may be designed to have variable resistances. They also may have resistances that change with light or heat exposure (e.g., photo-resistors, thermistors).

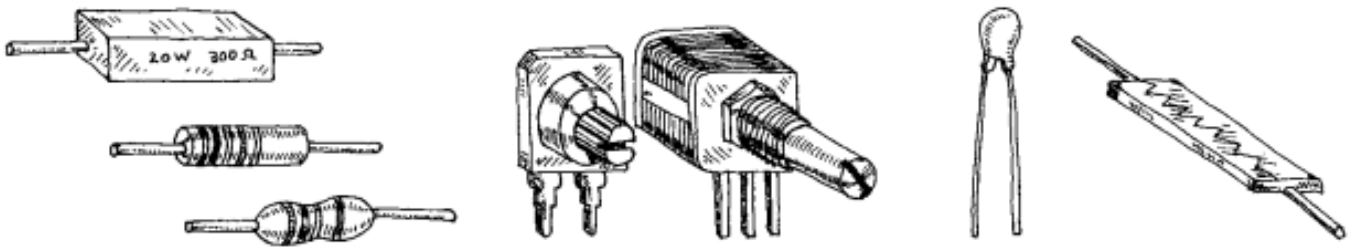

Fixed Resistors

Potentiometers and Trimmers

Thermistors and Phototransistors

Resistors

Current Limiter

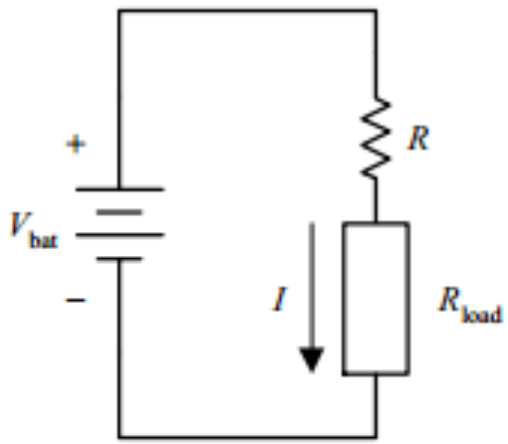

Voltage Divider

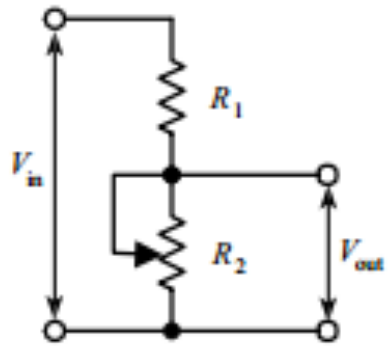

Understanding Resistor Labels

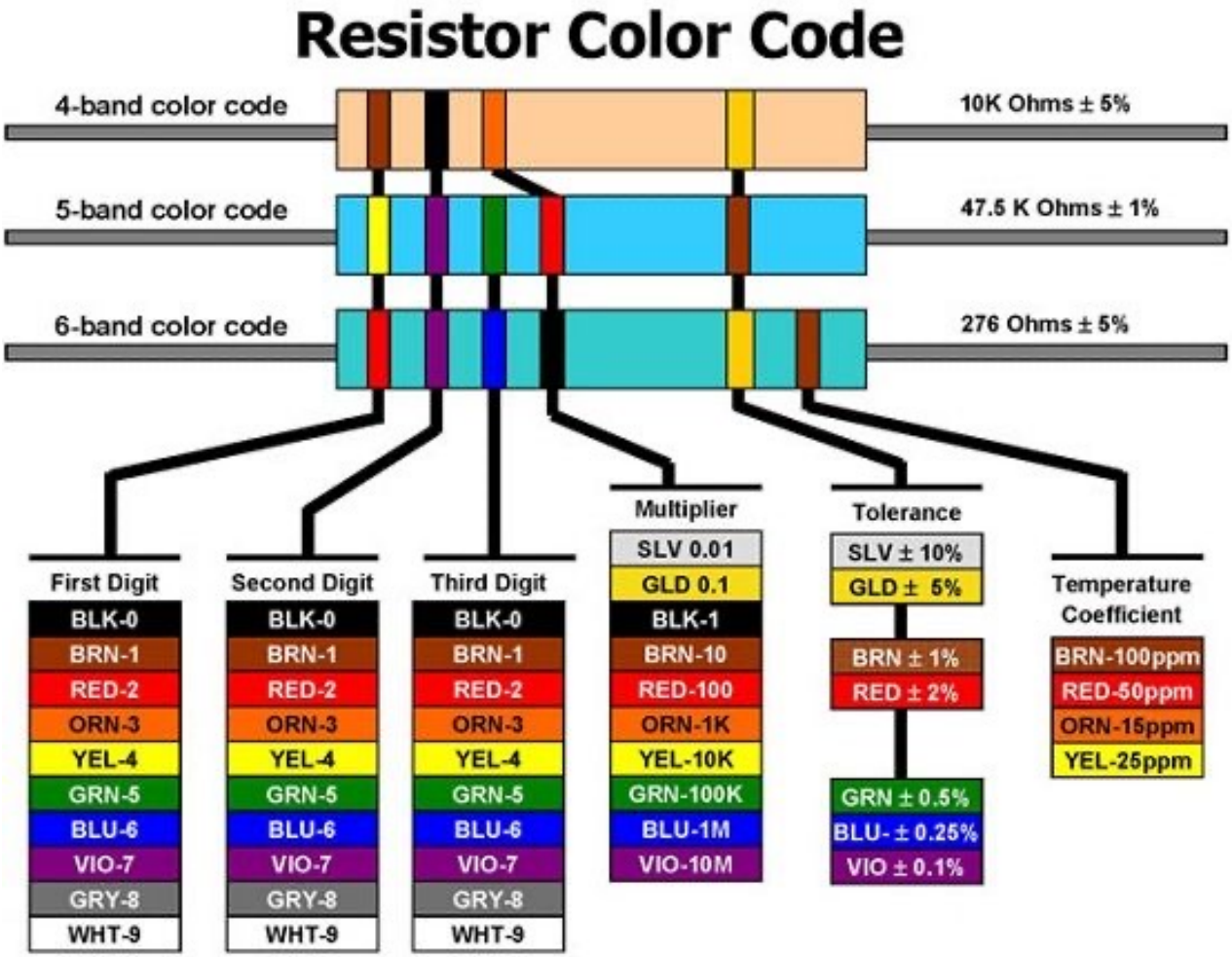

Examples

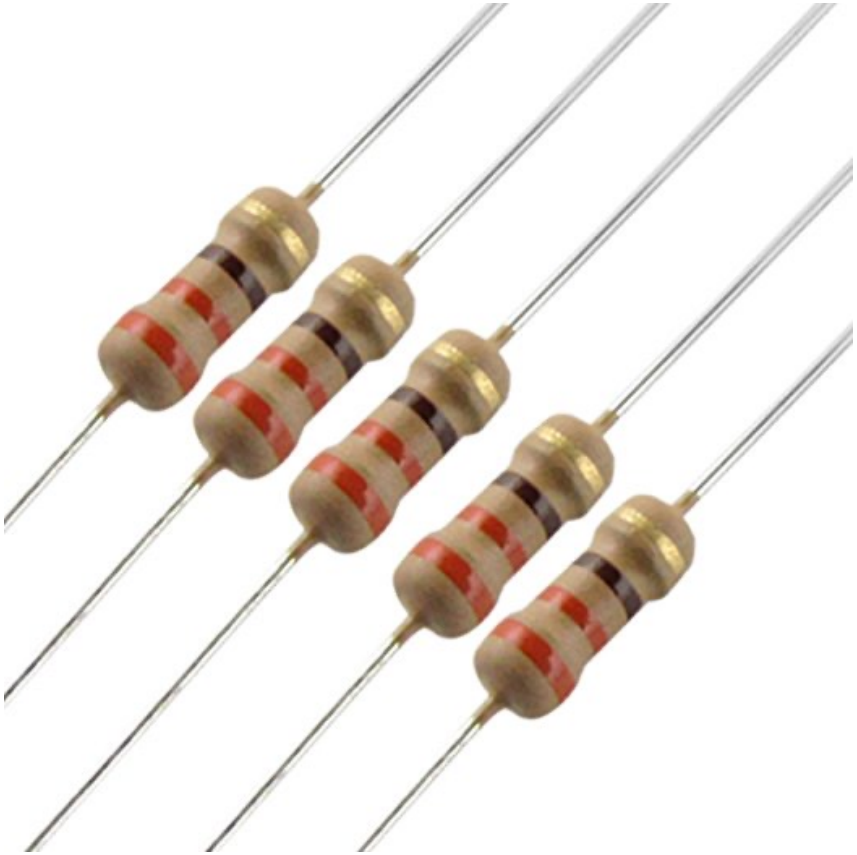

Examples

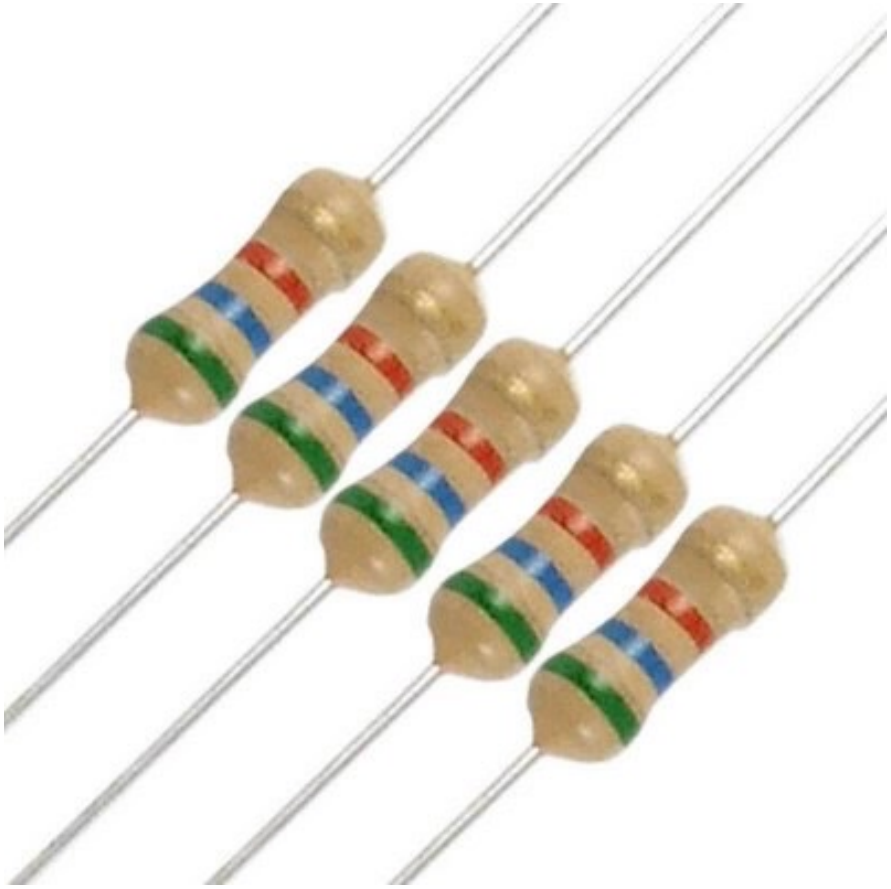

Examples

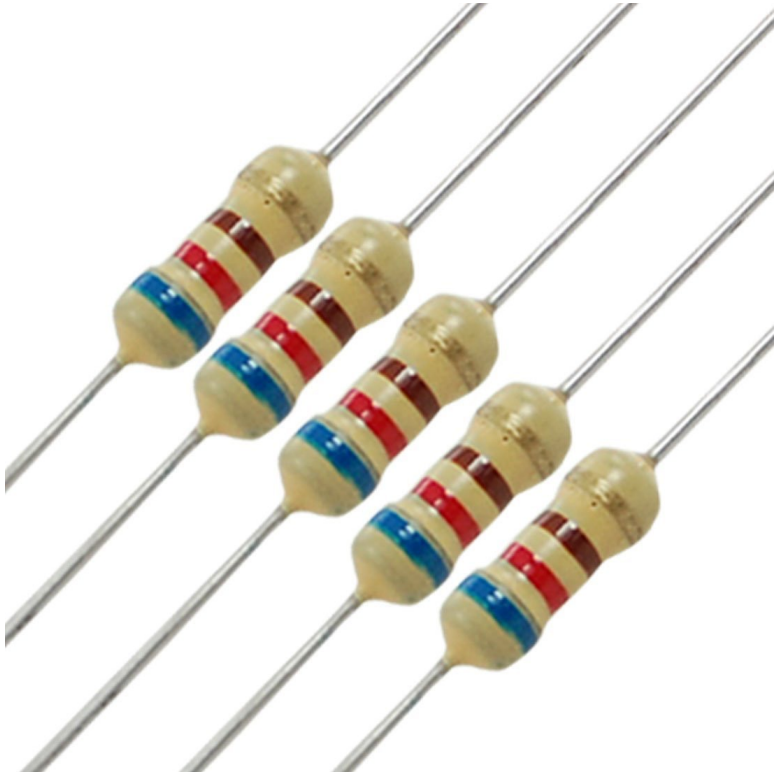

Variable Resistors

- Special kinds of variable resistors include
  - Potentiometers;
  - Rheostats; and
  - Trimmers.
- Potentiometers and rheostats are essentially the same thing, but rheostats are used specifically for high-power ac electricity, whereas potentiometers typically are used with lower-level dc electricity. Both potentiometers and rheostats are designed for frequent adjustment.
- Trimmers, on the other hand, are miniature potentiometers that are adjusted infrequently and usually come with pins that can be inserted into printed-circuit boards.

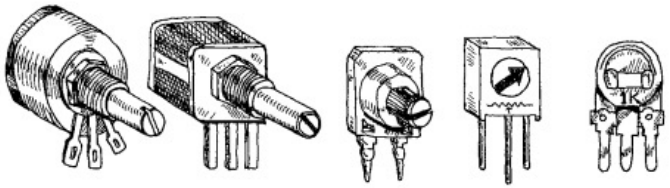

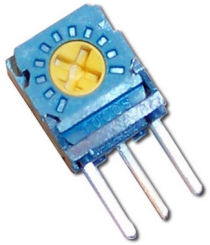

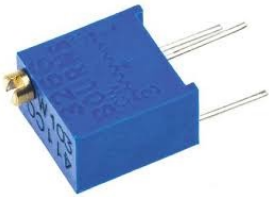

Photo-Resistors and Thermistors

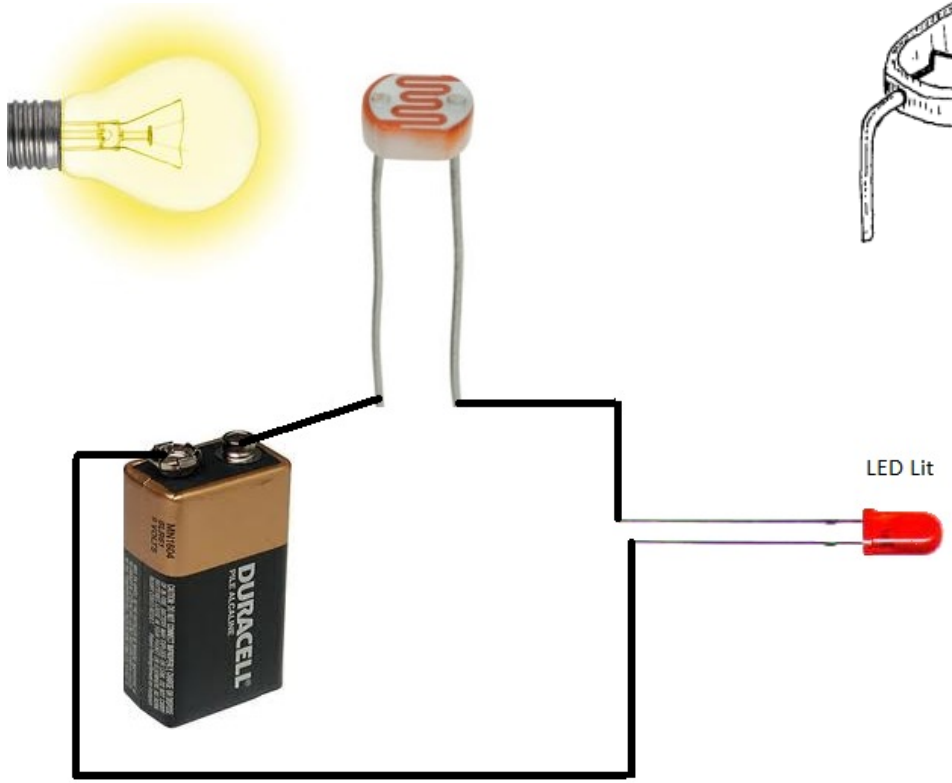

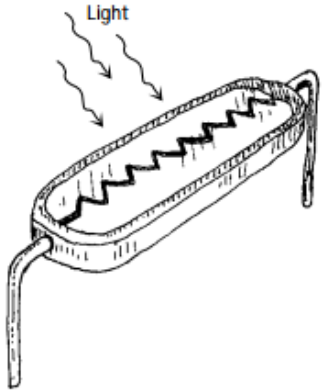

Photoresistor

Thermistor

Light Emitted Diode (LED)

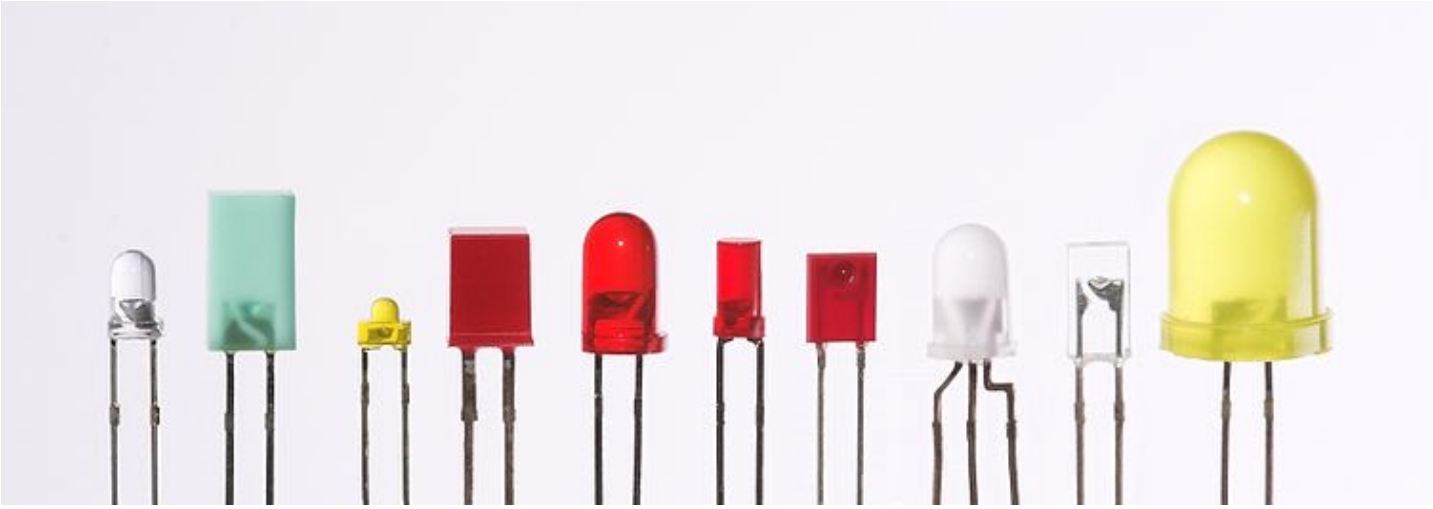

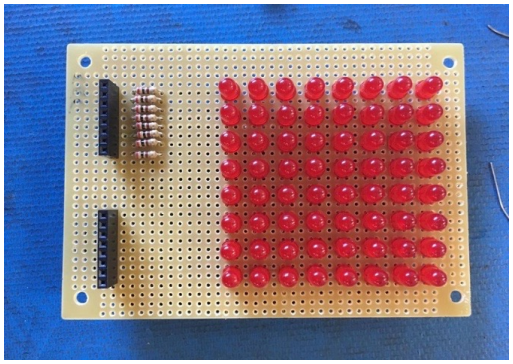

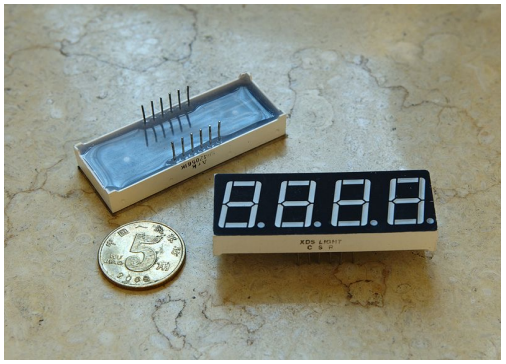

Optical Touch LED Matrix

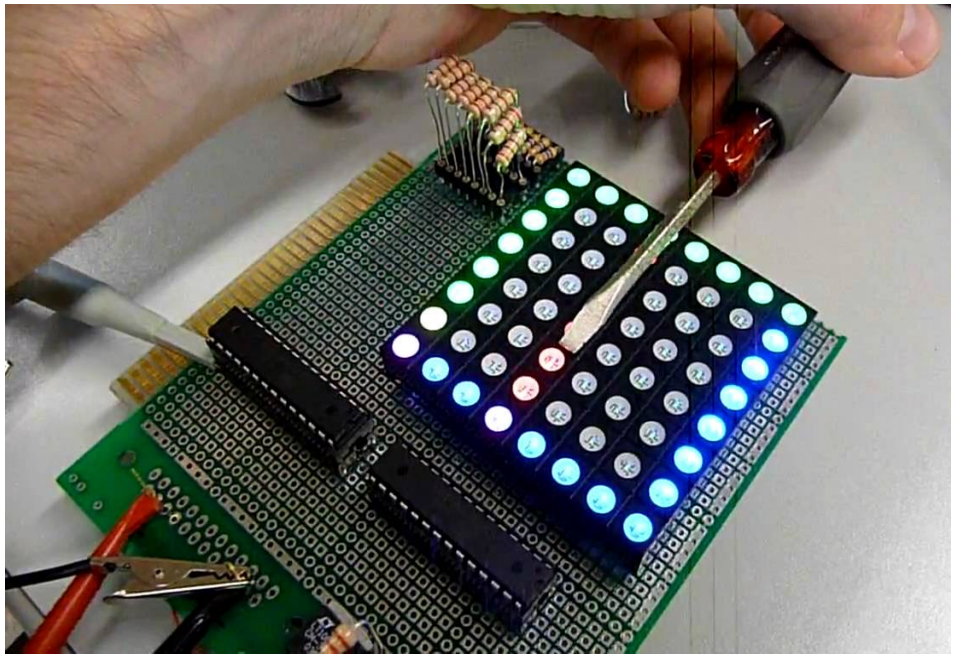

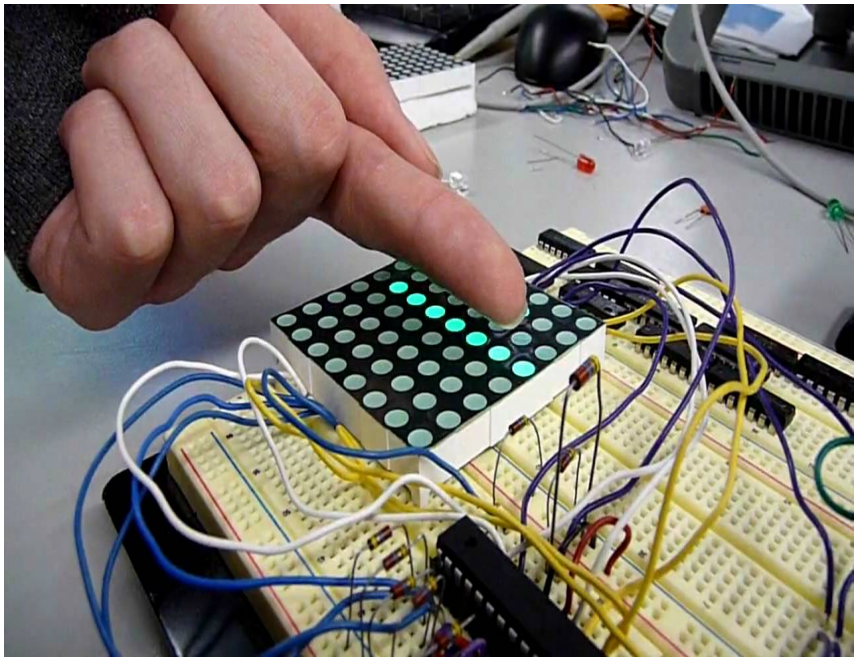

LED and Resistor Calculation

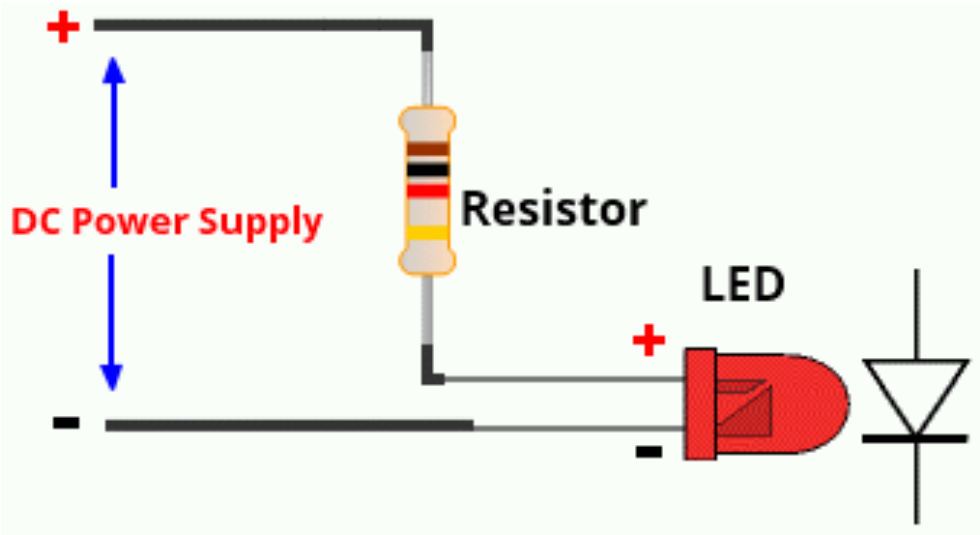

$$R = \frac{(V_s - V_{LED})}{I_{LED}}$$

LED and Resistor Calculation

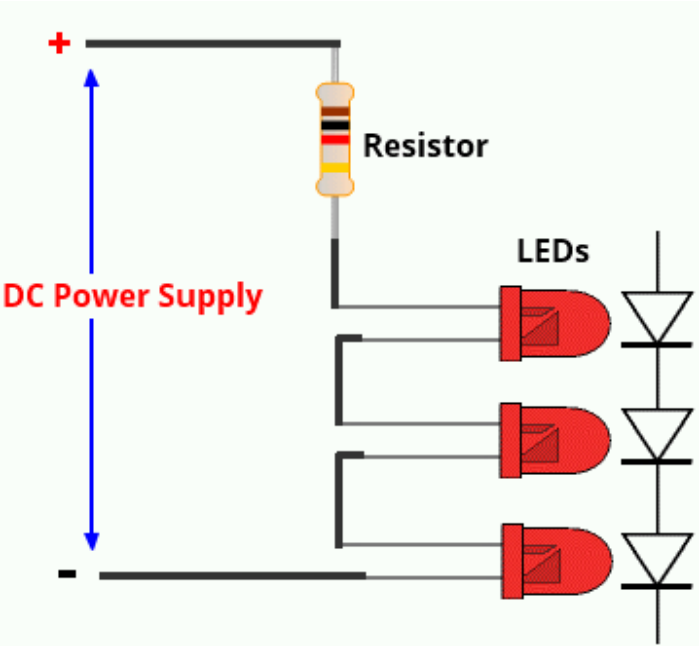

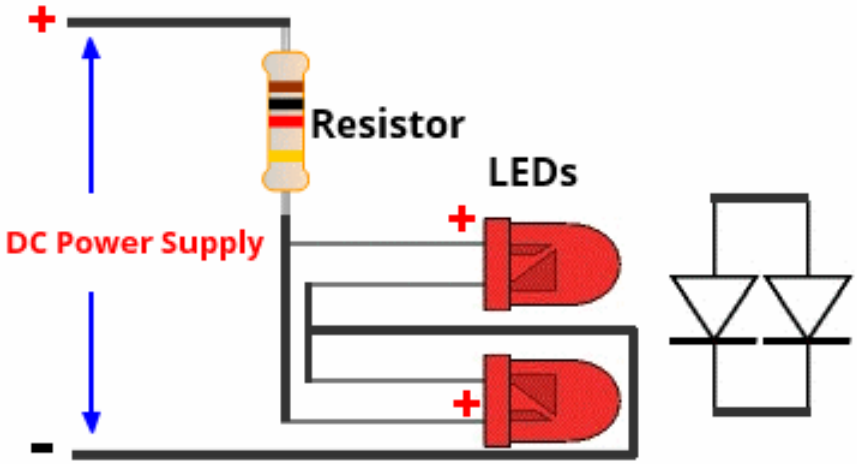

LED Applications

Exercise 1

- Analyze the circuit

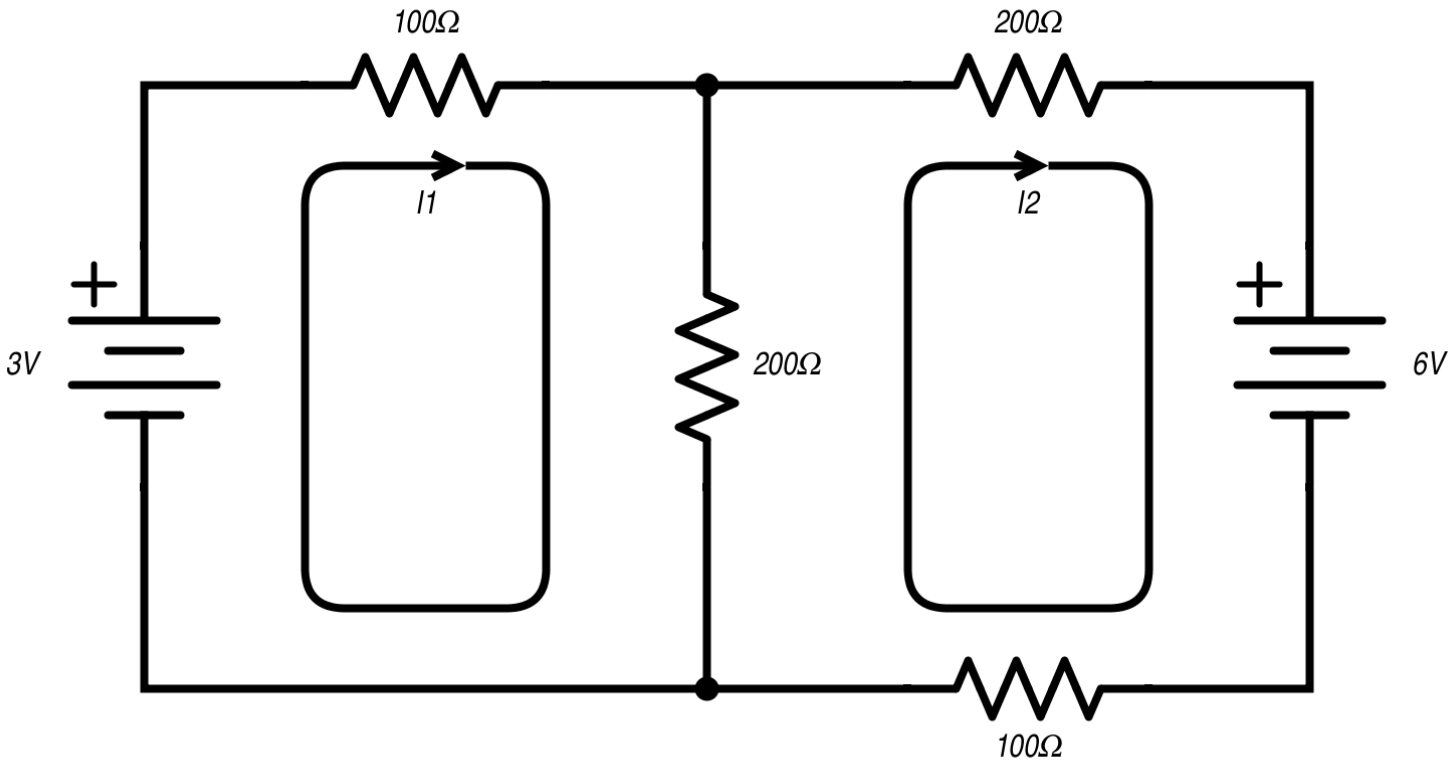

Exercise 2

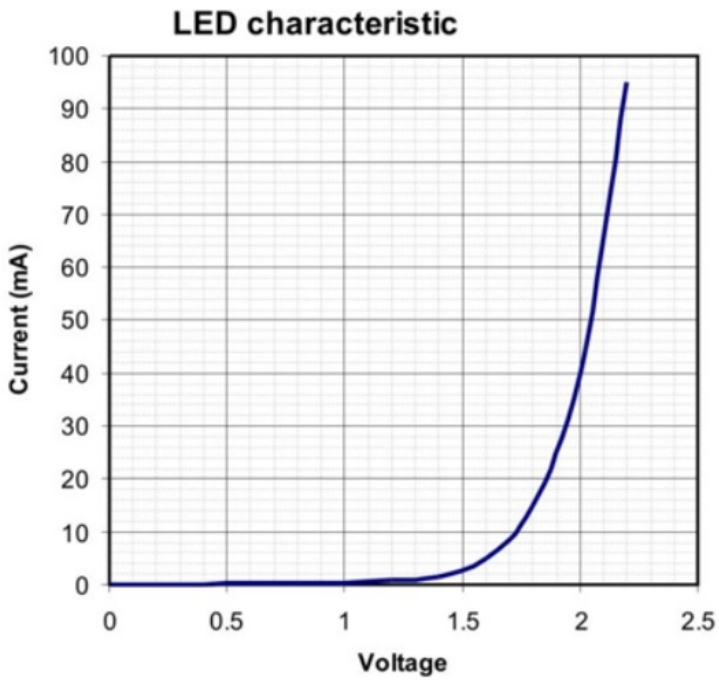
LED characteristic
Current (mA)
100
90
80
70
60
50
40
30
20
10
0
0
0.5
1
1.5
2
2.5
Voltage

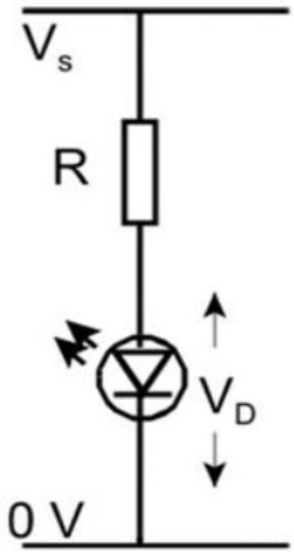
V_s
R
V_D
0 V

Pull Up and Pull Down Resistor

- Pull-up and Pull-down resistors are used to correctly bias the inputs of digital gates to **prevent them from floating** about randomly when there is no input condition.

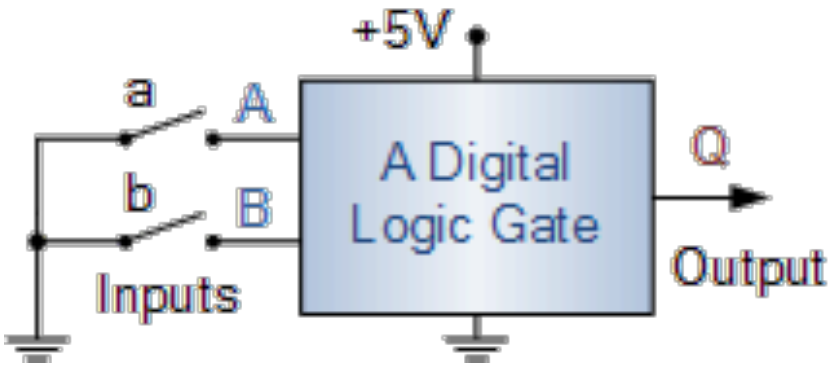

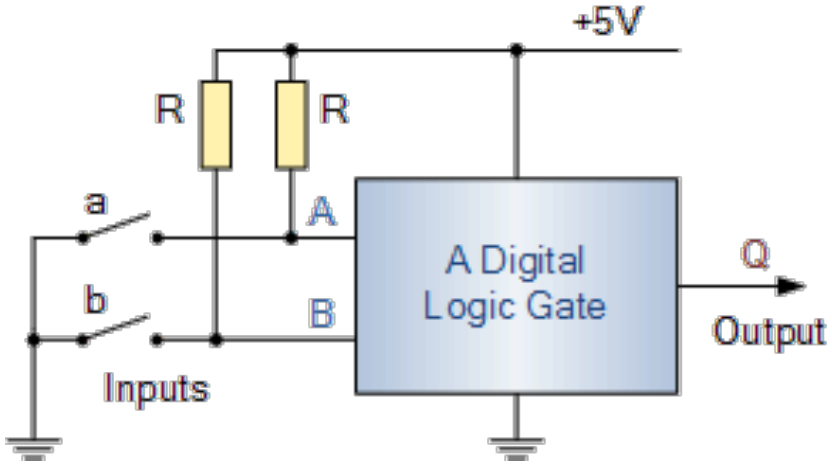

Pull-up Resistors

- Short circuit

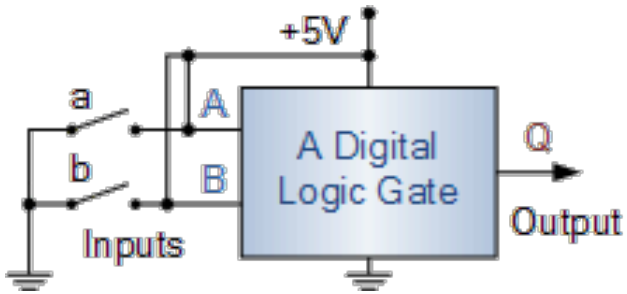
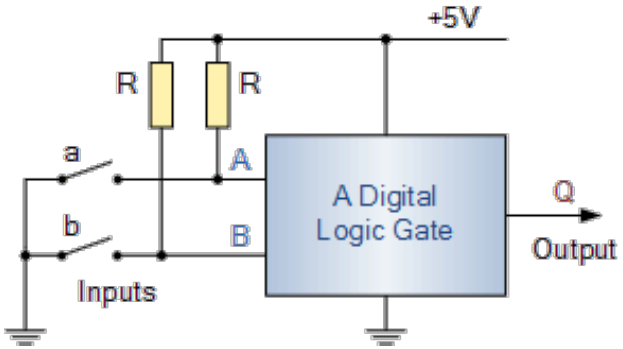
- Good connection